Dimensions

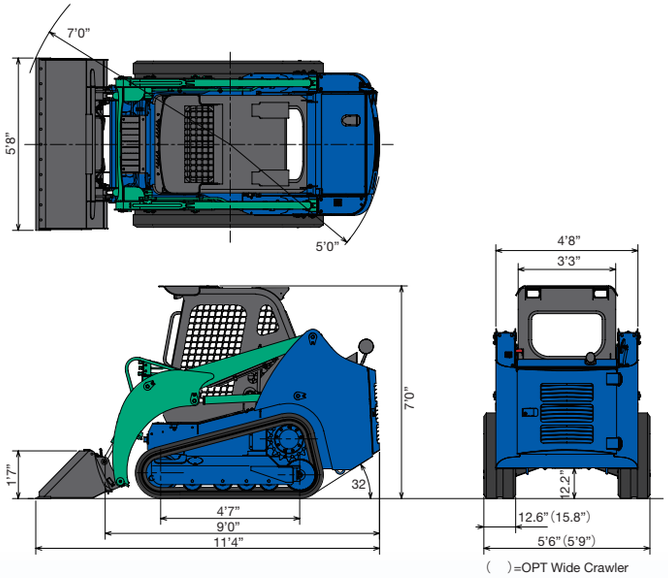

Working Range

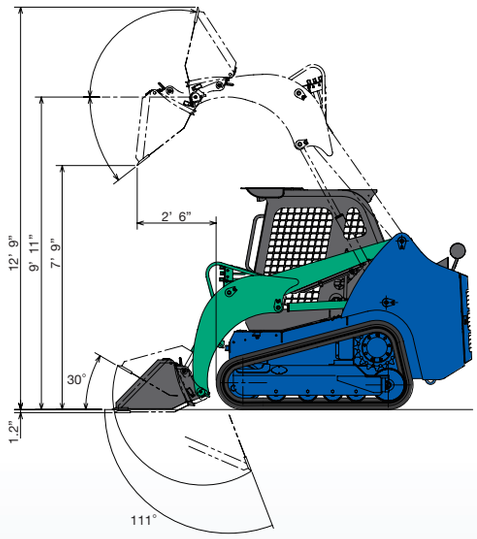

CL35

Compact Track Loader

Operating Weight : 7,826 lbs.

CL35 Specifications

	CL35
■ Performance	
Bucket Capacity SAE Heaped	14.3 cu. ft.
Bucket Width	5'8"
Operating Weight	7,826 lbs.
Transportation Weight	7,645 lbs.
Travel Speed (Low)	4.2 mph
Travel Speed (High)	6.2 mph
Gradeability	58% (30°)
Tipping Capacity SAE 732	4,916 lbs.
Rated Operating Capacity* 35% Tip Load	1,720 lbs.
Operationg Capacity* 50% Tip Load	2,458 lbs.
Ground Bearing Pressure (15.8" Crawler)	5.6 psi
Bucket Digging Force	6,474 lbs.
■ Engine	
Model	Yanmar 4TNV98
Rated Output	67 hp/2400 rpm
Displacement	3.318 L
Fuel Tank Capacity	24 gals
■ Hydraulic System	
System Pressure	3,000 psi
Hydraulic Tank Capacity	10.6 gals
Auxiliary Flow	18 gals/min

Options

15.8" Width Rubber Crawler
Enclosed Cabin
Air Conditioner
Heater

1 Comfortable Operation

2 Precision Movement

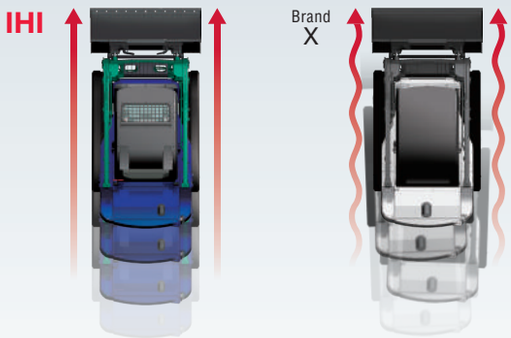

Distributed by **Compact Excavator Sales LLC**

400 Production Court, P.O. Box 667 • Elizabethtown, KY 42702-0667 • Phone: 1-800-538-1447 • Fax: 270-737-0419

www.ihices.com

COMPACT EXCAVATOR SALES LLC
400 Production Court
Elizabethtown, KY 42701
Phone: 800.538.1447 Fax: 270.737.0419
www.ihices.com

3 Easy Maintenance

4 Eco-friendly Design

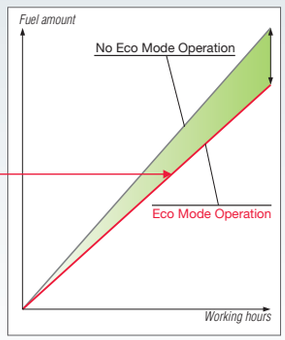

Additional Features

- The eco-friendly engine passes all EPA Interim Tier 4/ EC Stage 3A emission control regulations and offers low-noise operation.
- Large capacity 24 gallon fuel tank is equipped for longer hours of operation and less downtime for refueling.
- The use of a hydraulic joystick lever smoothes out travel and attachment operations, reducing fatigue.
- Standard equipped with arm-float and self leveling functions for maximum performance.
- The tilt-up canopy simplifies maintenance.
  Tilt-up can be done by removing 4 bolts.
  Since the tilt angle is a wide 70°, it provides ample accessibility for maintenance work.
- A heavy-duty welding structure has been used for the main frame. The arm has also been constructed for heavy workloads.
- Rubber covered inner running surface on the tracks reduces roller wear. Since the roller and core metal do not have direct contact, driving vibration and noise are minimized.